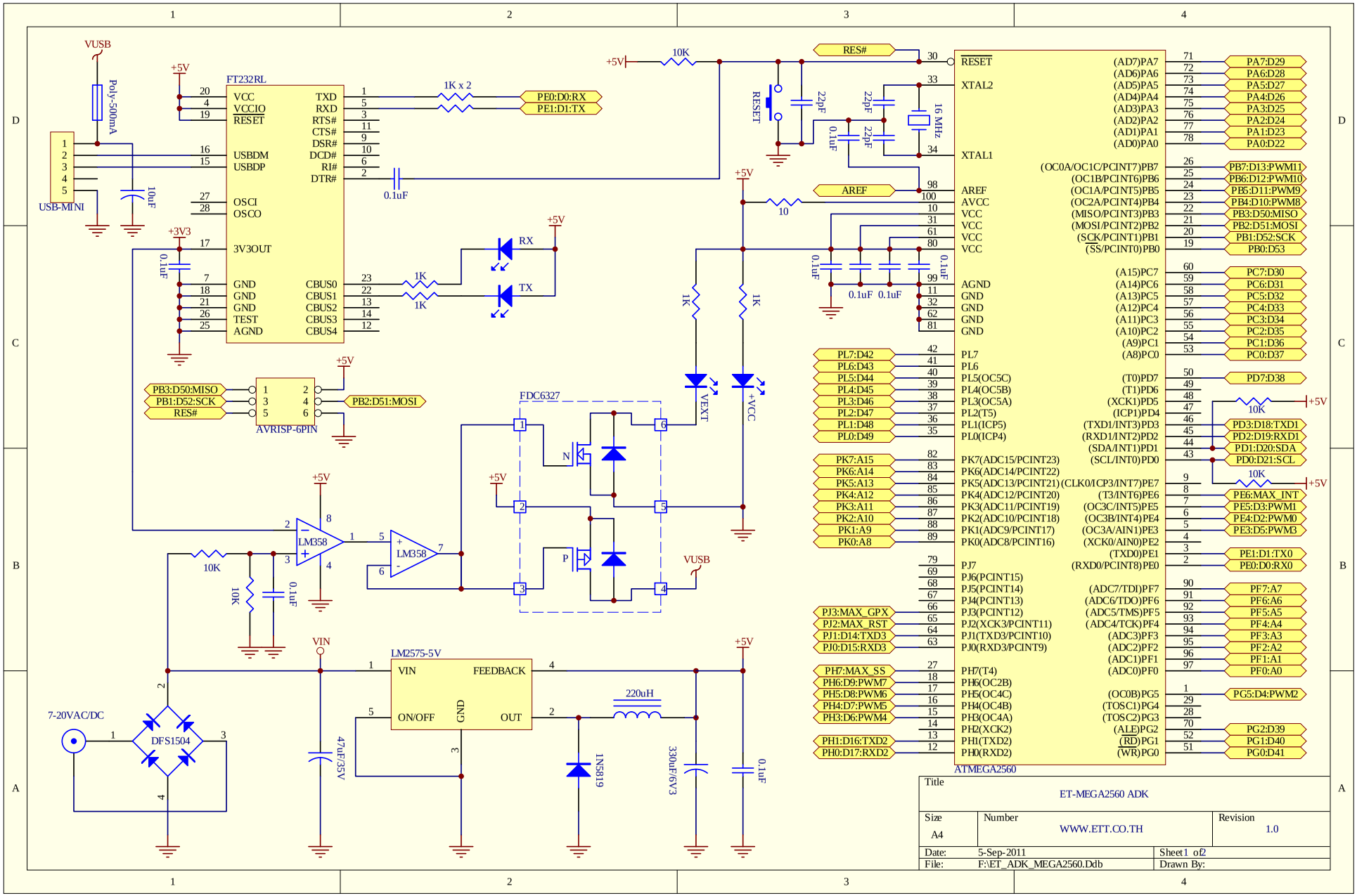
FT232RL
VCC
VCCIO
RESET
USBDM
USBDP
OSCI
OSCO
3V3OUT
GND
GND
GND
TEST
AGND
TXD
RXD
RTS#
CTS#
DSR#
DCD#
RI#
DTR#
CBUS0
CBUS1
CBUS2
CBUS3
CBUS4
USB-MINI
VUSB
Poly-500mA
10uF
0.1uF
+5V
+3V3
1K x 2
PE0:D0:RX
PE1:D1:TX
1K
RX
TX
AVRISP-6PIN
PB3:D50:MISO
PB1:D52:SCK
RES#
PB2:D51:MOSI
LM358
10K
FDC6327
N
P
VEXT
+VCC
VUSB
LM2575-5V
VIN
FEEDBACK
ON/OFF
GND
OUT
220uH
1N5819
330uF/6V3
47uF/35V
7-20VAC/DC
DFS1504
16 MHz
22pF
RESET
AREF
ATMEGA2560
RESET
XTAL2
XTAL1
AREF
AVCC
VCC
VCC
VCC
AGND
GND
GND
GND
GND
PL7
PL6
PL5(OC5C)
PL4(OC5B)
PL3(OC5A)
PL2(T5)
PL1(ICP5)
PL0(ICP4)
PK7(ADC15/PCINT23)
PK6(ADC14/PCINT22)
PK5(ADC13/PCINT21)
PK4(ADC12/PCINT20)
PK3(ADC11/PCINT19)
PK2(ADC10/PCINT18)
PK1(ADC9/PCINT17)
PK0(ADC8/PCINT16)
PJ7
PJ6(PCINT15)
PJ5(PCINT14)
PJ4(PCINT13)
PJ3(PCINT12)
PJ2(XCK3/PCINT11)
PJ1(TXD3/PCINT10)
PJ0(RXD3/PCINT9)
PH7(T4)
PH6(OC2B)
PH5(OC4C)
PH4(OC4B)
PH3(OC4A)
PH2(XCK2)
PH1(TXD2)
PH0(RXD2)
(AD7)PA7
(AD6)PA6
(AD5)PA5
(AD4)PA4
(AD3)PA3
(AD2)PA2
(AD1)PA1
(AD0)PA0
(OC0A/OC1C/PCINT7)PB7
(OC1B/PCINT6)PB6
(OC1A/PCINT5)PB5
(OC2A/PCINT4)PB4
(MISO/PCINT3)PB3
(MOSI/PCINT2)PB2
(SCK/PCINT1)PB1
(SS/PCINT0)PB0
(A15)PC7
(A14)PC6
(A13)PC5
(A12)PC4
(A11)PC3
(A10)PC2
(A9)PC1
(A8)PC0
(T0)PD7
(T1)PD6
(XCK1)PD5
(ICP1)PD4
(TXD1/INT3)PD3
(RXD1/INT2)PD2
(SDA/INT1)PD1
(SCL/INT0)PD0
(CLK0/ICP3/INT7)PE7
(T3/INT6)PE6
(OC3C/INT5)PE5
(OC3B/INT4)PE4
(OC3A/AIN1)PE3
(XCK0/AIN0)PE2
(TXD0)PE1
(RXD0/PCINT8)PE0
(ADC7/TDI)PF7
(ADC6/TDO)PF6
(ADC5/TMS)PF5
(ADC4/TCK)PF4
(ADC3)PF3
(ADC2)PF2
(ADC1)PF1
(ADC0)PF0
(OC0B)PG5
(TOSC1)PG4
(TOSC2)PG3
(ALE)PG2
(RD)PG1
(WR)PG0
PA7:D29
PA6:D28
PA5:D27
PA4:D26
PA3:D25
PA2:D24
PA1:D23
PA0:D22
PB7:D13:PWM11
PB6:D12:PWM10
PB5:D11:PWM9
PB4:D10:PWM8
PB3:D50:MISO
PB2:D51:MOSI
PB1:D52:SCK
PB0:D53
PC7:D30
PC6:D31
PC5:D32
PC4:D33
PC3:D34
PC2:D35
PC1:D36
PC0:D37
PD7:D38
PD3:D18:TXD1
PD2:D19:RXD1
PD1:D20:SDA
PD0:D21:SCL
PE6:MAX_INT
PE5:D3:PWM1
PE4:D2:PWM0
PE3:D5:PWM3
PE1:D1:TX0
PE0:D0:RX0
PF7:A7
PF6:A6
PF5:A5
PF4:A4
PF3:A3
PF2:A2
PF1:A1
PF0:A0
PG5:D4:PWM2
PG2:D39
PG1:D40
PG0:D41
PL7:D42
PL6:D43
PL5:D44
PL4:D45
PL3:D46
PL2:D47
PL1:D48
PL0:D49
PK7:A15
PK6:A14
PK5:A13
PK4:A12
PK3:A11
PK2:A10
PK1:A9
PK0:A8
PJ3:MAX_GPX
PJ2:MAX_RST
PJ1:D14:TXD3
PJ0:D15:RXD3
PH7:MAX_SS
PH6:D9:PWM7
PH5:D8:PWM6
PH4:D7:PWM5
PH3:D6:PWM4
PH1:D16:TXD2
PH0:D17:RXD2
Title
ET-MEGA2560 ADK
Size
A4
Number
WWW.ETT.CO.TH
Revision
1.0
Date:
5-Sep-2011
Sheet1 of2
File:
F:\ET_ADK_MEGA2560.Ddb
Drawn By:

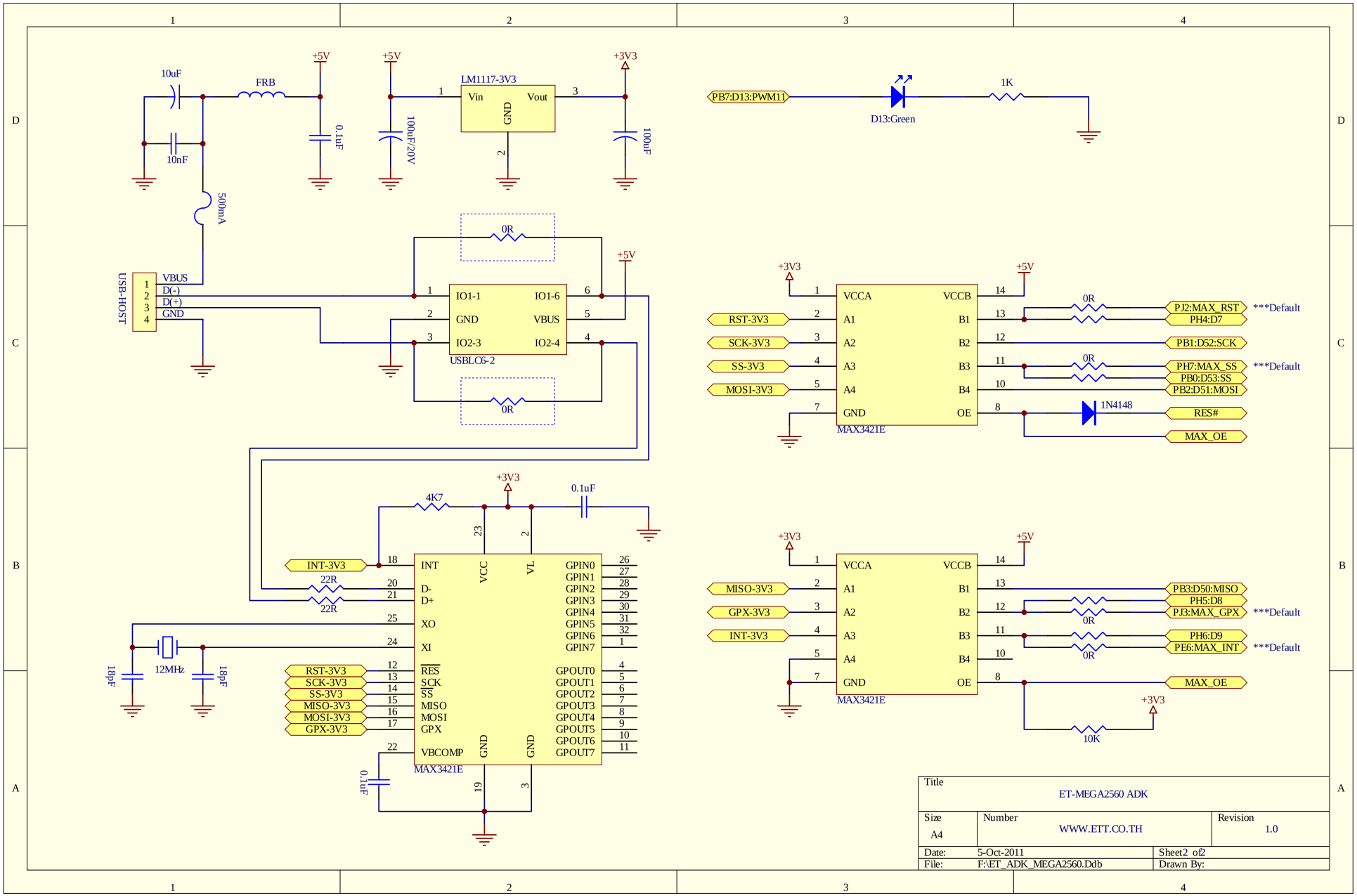
10uF
FRB
+5V
10nF
0.1uF
500mA
+5V
100uF/20V
LM1117-3V3
Vin
Vout
GND
+3V3
100uF
USB-HOST
VBUS
D(-)
D(+)
GND
0R
IO1-1
IO1-6
GND
VBUS
IO2-3
IO2-4
USBLC6-2
+5V
0R
PB7:D13:PWM11
D13:Green
1K
+3V3
+5V
VCCA
VCCB
RST-3V3
SCK-3V3
SS-3V3
MOSI-3V3
A1
A2
A3
A4
B1
B2
B3
B4
GND
OE
MAX3421E
0R
PJ2:MAX_RST
PH4:D7
***Default
PB1:D52:SCK
0R
PH7:MAX_SS
PB0:D53:SS
***Default
PB2:D51:MOSI
1N4148
RES#
MAX_OE
+3V3
4K7
0.1uF
INT-3V3
22R
22R
INT
D-
D+
XO
XI
VCC
VL
GPIN0
GPIN1
GPIN2
GPIN3
GPIN4
GPIN5
GPIN6
GPIN7
12MHz
18pF
18pF
RST-3V3
SCK-3V3
SS-3V3
MISO-3V3
MOSI-3V3
GPX-3V3
RES
SCK
SS
MISO
MOSI
GPX
GPOUT0
GPOUT1
GPOUT2
GPOUT3
GPOUT4
GPOUT5
GPOUT6
GPOUT7
VBCOMP
GND
GND
MAX3421E
0.1uF
+3V3
+5V
MISO-3V3
GPX-3V3
INT-3V3
PB3:D50:MISO
PH5:D8
0R
PJ3:MAX_GPX
***Default
PH6:D9
0R
PE6:MAX_INT
***Default
MAX_OE
+3V3
10K
Title
ET-MEGA2560 ADK
Size
A4
Number
WWW.ETT.CO.TH
Revision
1.0
Date:
5-Oct-2011
Sheet2 of2
File:
F:\ET_ADK_MEGA2560.Ddb
Drawn By:

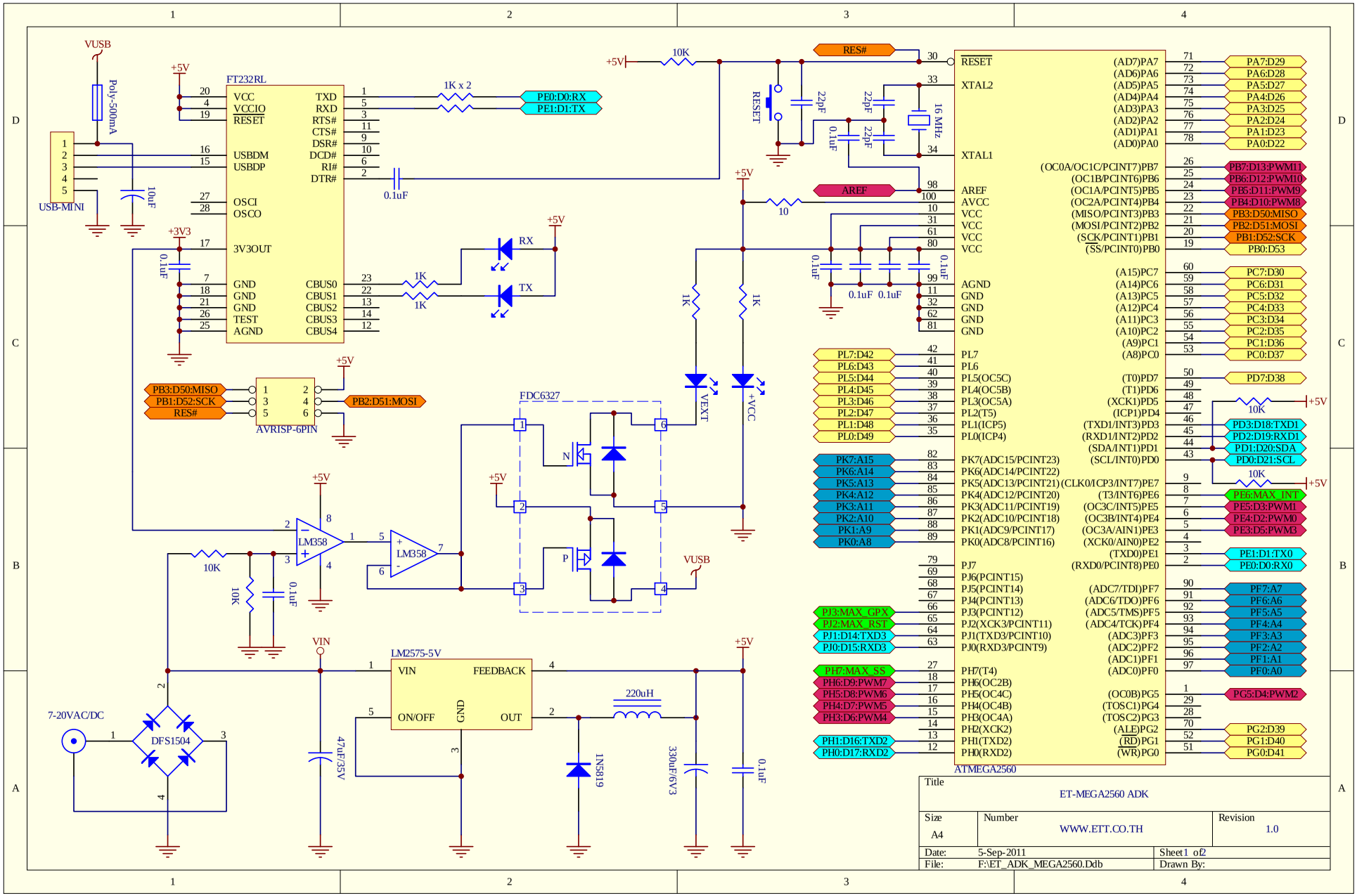
FT232RL
VCC
VCCIO
RESET
USBDM
USBDP
OSCI
OSCO
3V3OUT
GND
GND
GND
TEST
AGND
TXD
RXD
RTS#
CTS#
DSR#
DCD#
RI#
DTR#
CBUS0
CBUS1
CBUS2
CBUS3
CBUS4
USB-MINI
Poly-500mA
VUSB
10uF
0.1uF
1K x 2
PE0:D0:RX
PE1:D1:TX
1K
RX
TX
AVRISP-6PIN
PB3:D50:MISO
PB1:D52:SCK
RES#
PB2:D51:MOSI
LM358
FDC6327
N
P
VEXT
+VCC
10K
10
RESET
22pF
16 MHz
AREF
ATMEGA2560
PA7:D29
PA6:D28
PA5:D27
PA4:D26
PA3:D25
PA2:D24
PA1:D23
PA0:D22
PB7:D13:PWM11
PB6:D12:PWM10
PB5:D11:PWM9
PB4:D10:PWM8
PB3:D50:MISO
PB2:D51:MOSI
PB1:D52:SCK
PB0:D53
PC7:D30
PC6:D31
PC5:D32
PC4:D33
PC3:D34
PC2:D35
PC1:D36
PC0:D37
PD7:D38
PD3:D18:TXD1
PD2:D19:RXD1
PD1:D20:SDA
PD0:D21:SCL
PE6:MAX_INT
PE5:D3:PWM1
PE4:D2:PWM0
PE3:D5:PWM3
PE1:D1:TX0
PE0:D0:RX0
PF7:A7
PF6:A6
PF5:A5
PF4:A4
PF3:A3
PF2:A2
PF1:A1
PF0:A0
PG5:D4:PWM2
PG2:D39
PG1:D40
PG0:D41
PL7:D42
PL6:D43
PL5:D44
PL4:D45
PL3:D46
PL2:D47
PL1:D48
PL0:D49
PK7:A15
PK6:A14
PK5:A13
PK4:A12
PK3:A11
PK2:A10
PK1:A9
PK0:A8
PJ3:MAX_GPX
PJ2:MAX_RST
PJ1:D14:TXD3
PJ0:D15:RXD3
PH7:MAX_SS
PH6:D9:PWM7
PH5:D8:PWM6
PH4:D7:PWM5
PH3:D6:PWM4
PH1:D16:TXD2
PH0:D17:RXD2
7-20VAC/DC
DFS1504
VIN
LM2575-5V
FEEDBACK
ON/OFF
GND
OUT
220uH
1N5819
330uF/6V3
47uF/35V
Title
ET-MEGA2560 ADK
Size
A4
Number
WWW.ETT.CO.TH
Revision
1.0
Date: 5-Sep-2011
Sheet1 of2
File: F:\ET_ADK_MEGA2560.Ddb
Drawn By:

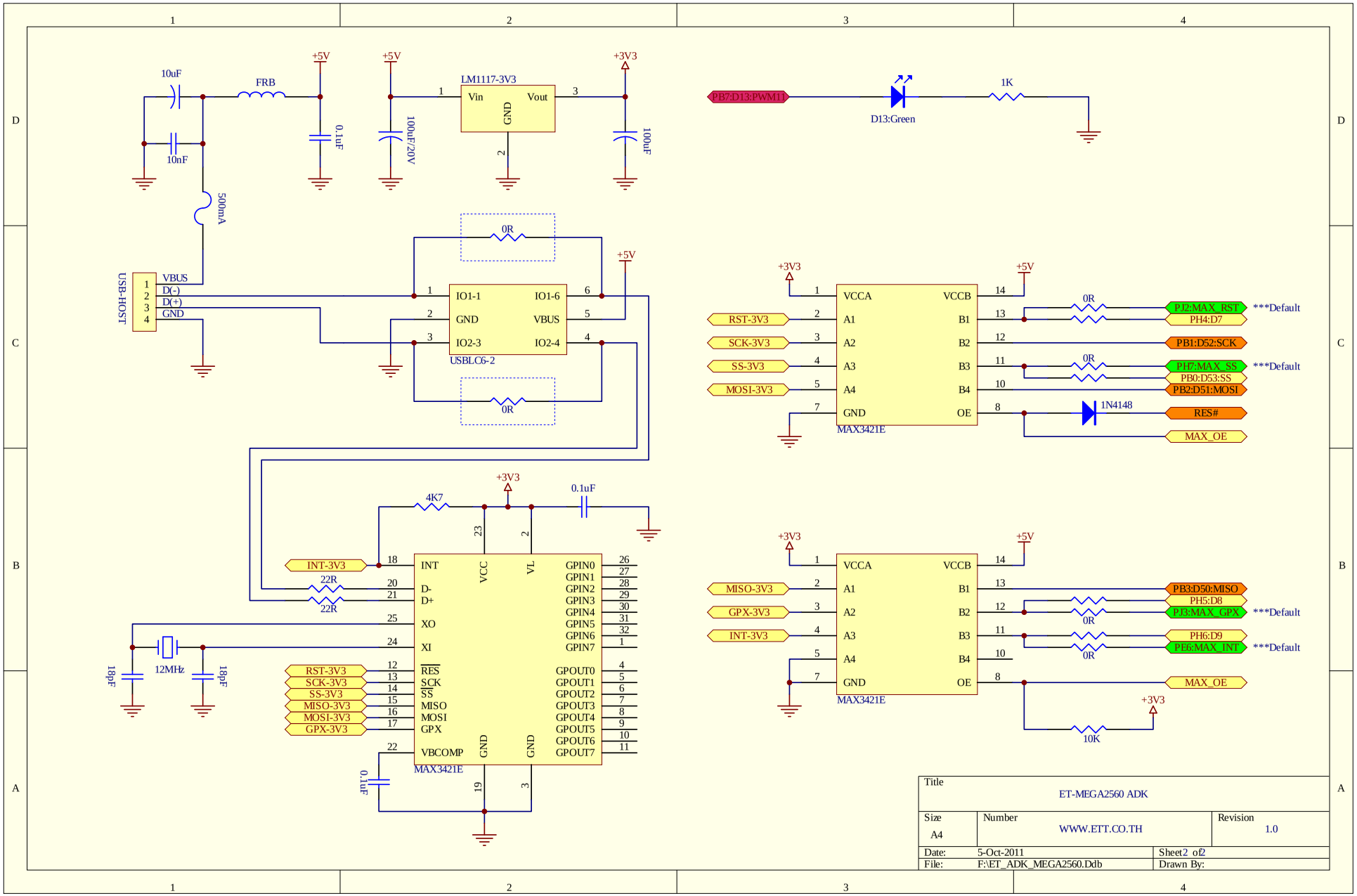

Title		
	ET-MEGA2560 ADK	
Size A4	Number WWW.ETT.CO.TH	Revision 1.0
Date: 5-Oct-2011		Sheet 2 of 2
File: F:\ET_ADK_MEGA2560.Ddb		Drawn By: